VIVID

Sonos smart projector to watch media anytime, anywhere.

Duration: 12 Weeks

Project Brief:

Create a hypothetical product that addresses Sonos’ assortment gap

Client: Sonos

Objective:
Create a product that seamlessly blends in with Sonos' current lineup

Sonos Market Share

76%

Sonos dominates the wireless audio systems landscape among homes.

7M+

In 2018, around 7 million households had one or more Sonos devices.

4.6M units

In 2018, Sonos sold 4.5 million units worldwide.

$1.3B

In 2022, Sonos made an annual sales revenue of 1.3 billion U.S. dollars.

MOOD BOARD

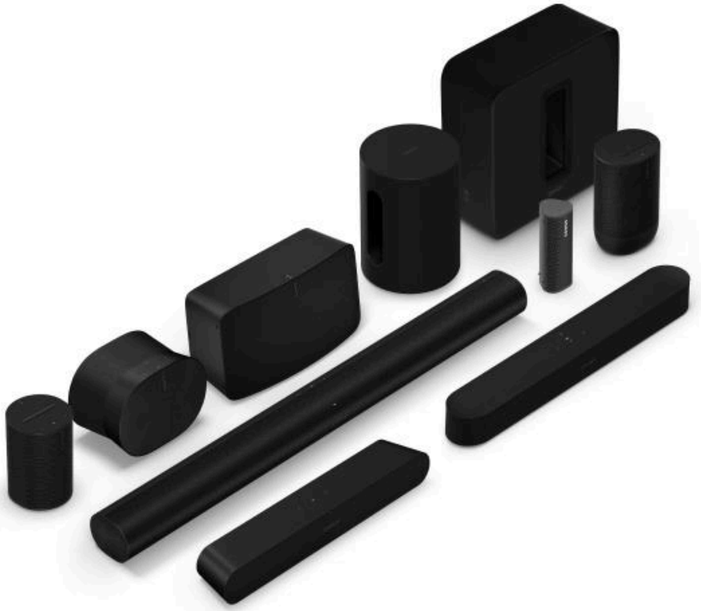

Greige

Olive

Cloud White

Sunset

Sonos Black

Wave

PAST DESIGN TRENDS

USER PERSONA

Emily Davis

About

Age: 34

Status: Married

Occupation: Marketing Manager

Interests

Reading: Enjoys reading parenting books and articles to stay informed.

Technology Enthusiast: Enjoys staying updated on the latest tech trends and gadgets.

Home Decor: Interested in enhancing her living space with stylish and functional home accessories.

Routine Breakdown

Priority	Jobs to be done	Circumstances	Tools Hired
1	Take Care of the Baby	Feed The Baby	Formula
		Clean The Baby	Diapers
		Sleep The Baby	Crib
		Play With Baby	Toys
2	Wants Entertainment	On The Go	Phone
		In The Livingroom	Television
		In Her Room	Laptop

IDEATION

SONOS
USER:
Financially stable
office worker
middle age
VALUES:
long city
timeless
minimal
responsible
sustainability
enduring
unexpected
minimal color
TECH:
portable speakers
home theaters
ceiling light speaker
acoustics
Furniture
modular design
Peleton/tredmills
Augmented reality
instruments
record player/key-board
headphones/bone-conduction
eye mask for sleep
alarm system
diffuser
lamp
toaster/blender
laser show
pet cam
baby monitor
mobile
light bar
holographic projector
digital frame
brita
kettle
planter
coffee maker
ENVIRONMENT:
office spaces
home
outdoors
retail spaces
theaters
gym
ACTIVITIES:
fitness
dancing
casual listening
cooking
sleeping
eating
meditating → wellness
pooping
exercising
parenting
HOME:
bathroom
kitchen
patio
bedroom
home gym
nursery
dinning room
small spaces
laundry
SAME
RICH
First-time parents
students
SIGHT:
modular design
AI
eyemask/sleep
alarm system
lamp
laser show
pet cam
baby monitor
mobile
light bar
projector
digital frame
AR glasses
SMELL:
diffuser
deodorate shoe rack
humidifier
scent dispenser
car freshener
nose plugs
bidet
toilet odor eater (poopery)
air purifier
scented candle
incense burner
mosquito repellant
candle + smart candle
TOUCH:
Furniture
Peletons/treds
Instrument
Keyboard
headphones
eye massage
kettle
planter
coat rack
weighted blanket
vibrating messager
auto lacing shoes
office chair
subwoofer sofa
tactile waves (zen garden)
lounser can backpack
pocket speaker
mouse
SMK
TASTE:
toaster
blender
brita
coffee maker
bluetooth grill
water bottle
pet feeder
protein shaker
popcorn maker
bar
SIGHT
SMELL
TOUCH
TASTE

BIG IDEAS

Smart Projector

Choosing a direction we liked, we started sketching more projector designs.

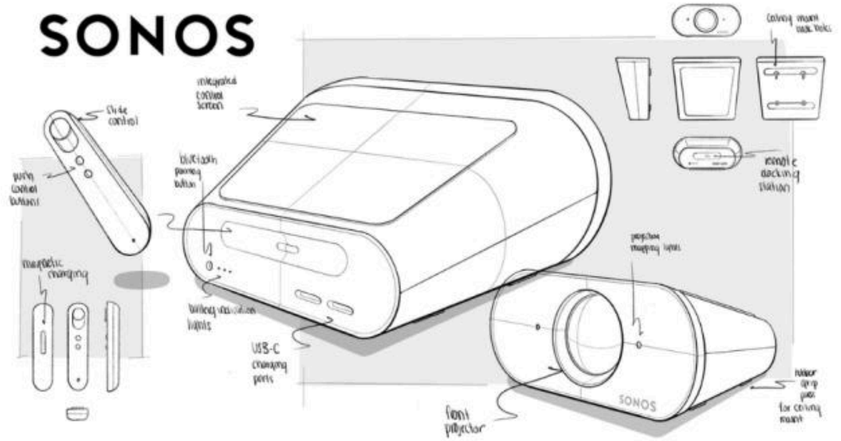

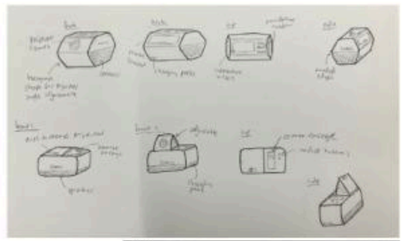

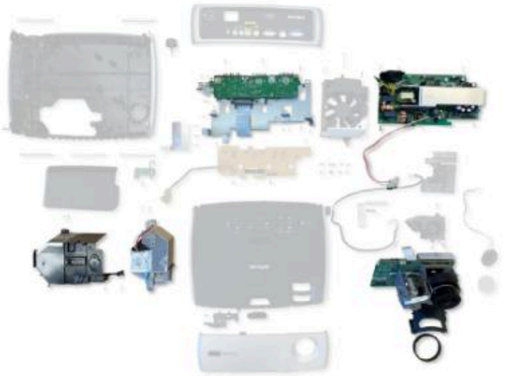

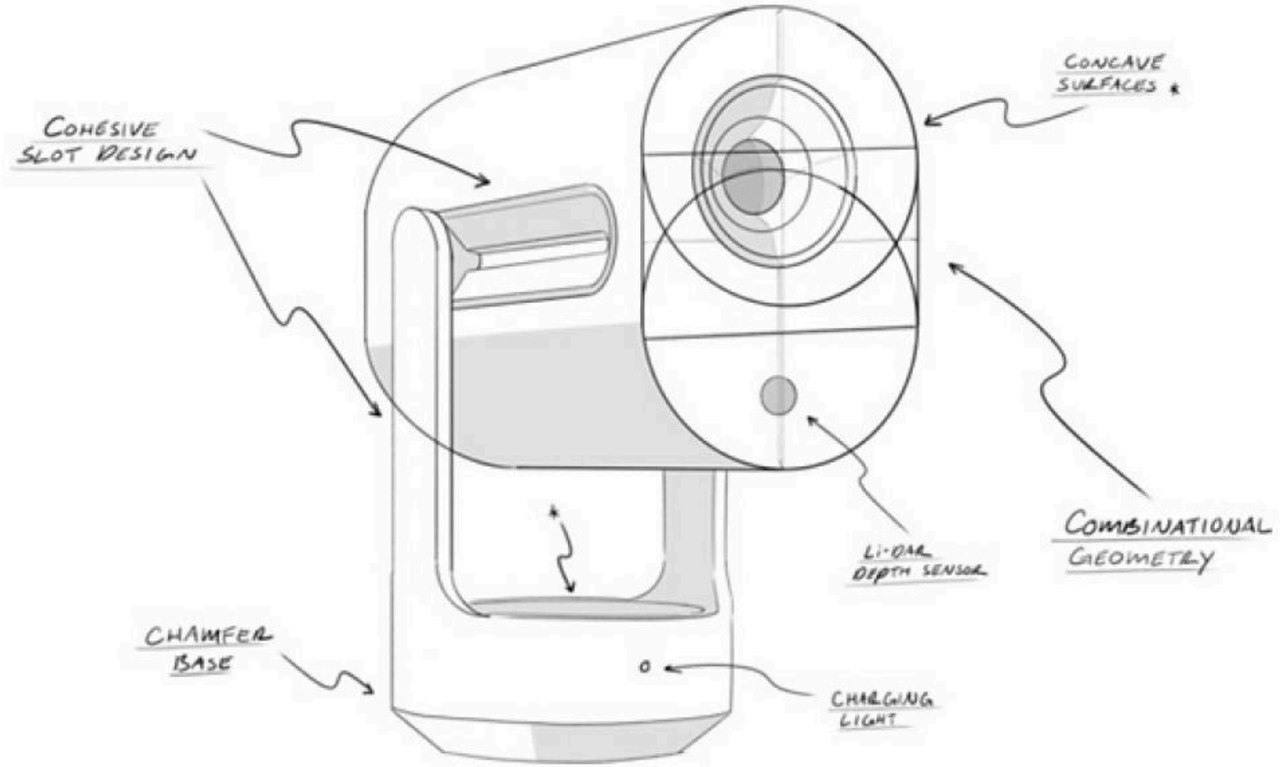

FINAL DIRECTION

My Contribution: Jobs To Be Done

New Mother

Take Care of the Baby

Can act as stimulation media.
Can act as nursery projector.

Wants Entertainment

Can watch movies anywhere.
Can access all her media.

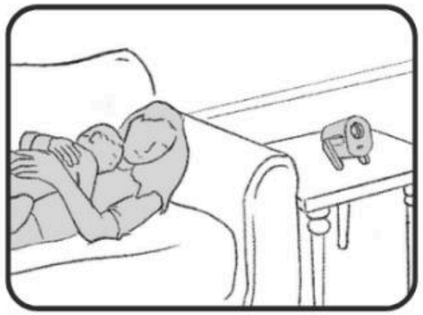

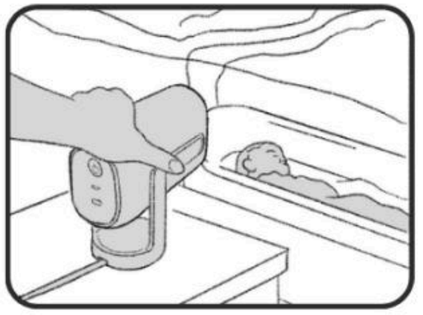

College Student

Movies With Friends

Can watch movies with friends

Needs A Monitor

Use as another monitor
Non-invasive setup

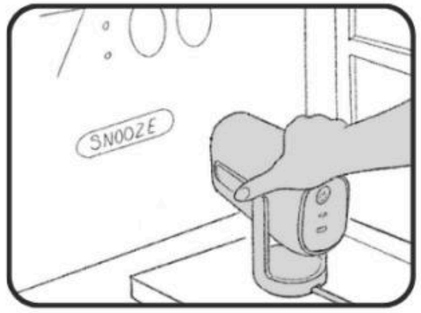

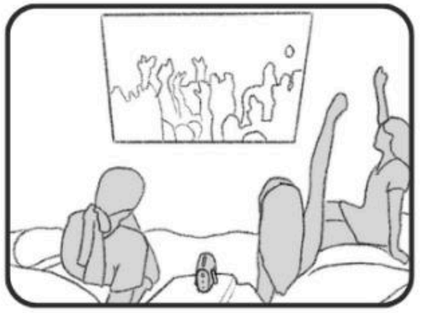

Sign in Cart

The new Sonos Vivid

A projector charging stand and folding legs

Buy now

SONOS
SONOS
Vivi
1
At a glance

FEATURES

PORTABILITY

AI & MACHINE LEARNING

COLORS, MATERIALS, & FINISHES

- Sonos Black
- Cloud White
- Sunset
- Wave
- Olive

EXPLODED MODEL

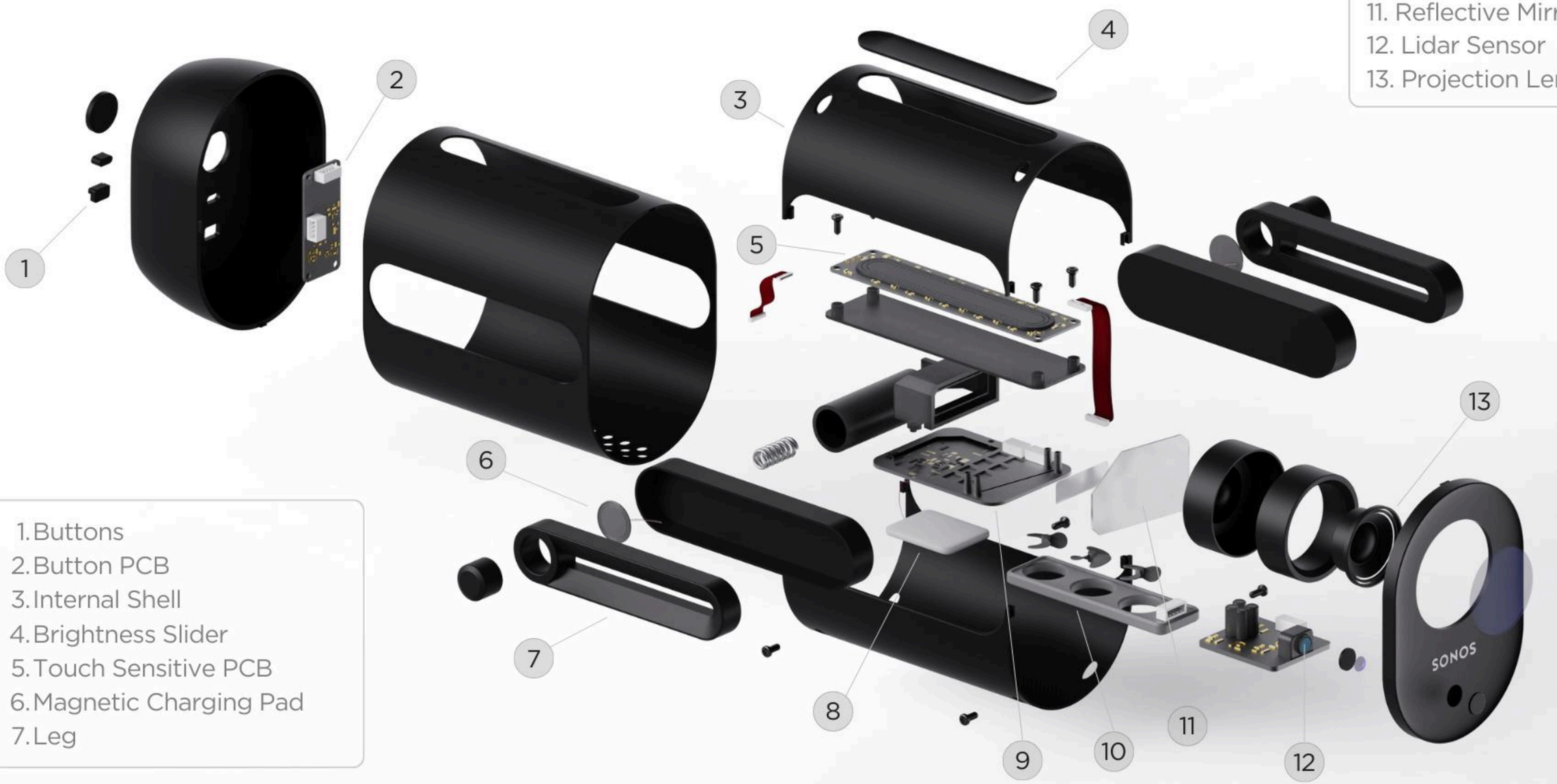

1. Buttons
2. Button PCB
3. Internal Shell
4. Brightness Slider
5. Touch Sensitive PCB
6. Magnetic Charging Pad
7. Leg

8. LED Power Supply
9. Projection Drive Board
10. Fans
11. Reflective Mirror
12. Lidar Sensor
13. Projection Lens

SONOS